//polytype

Polytype AG
26, route de la Glâne
P.O. Box 1184
CH-1701 Fribourg/Switzerland

Phone: +41 26 426 11 11
Fax: +41 26 426 11 12

polytype@wifag-polytype.com
www.wifag-polytype.com

Greiner Packaging International GmbH
Attn. to Mr. Christian Zehetner
Gewerbestrasse 15
4642 Sattledt
Austria

NAD

July 21. 2025

REVISED QUOTATION No. CU-25025-R2

High performance round cup printer

Dear Mr. Zehetner

We refer to our discussion / negotiation of today, dated July 16. 2025. Following it is our pleasure in submitting to you the following **revised quotation (2. Revision)** :

One (1) POLYCUP, 6-8 colours high performance cup printing system for round, tapered containers
Model: BDM 681 UVD (on-mandrel UV curing)

Certified Management System
SQS
ISO 9001 / OHSAS 18001

Reg. No.: CH-217-0.130.525-1
VAT No.: CHE-116.321.054

Contents:

Pos. 1 Machine design
Pos. 2 Inking/Printing unit
Pos. 3 Machine base
Pos. 4 Pre-treatment unit
Pos. 5 UV curing system
Pos. 6 Automatic cup infeed
Pos. 7 Automatic cup outfeed
Pos. 8 Size parts (tooling) ; Not included
Pos. 9 Peripherals
Pos. 10 Options requested by Greiner / Additional Options / Final Net Price
Pos. 11 Special Conditions
Pos. 12 BDM 681 Machine Specifications
Pos. 13 Commercial Conditions

1 Machine Design

The high performance Polytype BDM-681 cup printing system is made of items 2 – 8 in the list above. The base printing unit (pos. 2) and the machine base (pos. 3) are made in a robust steel construction. The pre-treatment (pos. 4) and UV-Mandrel curing (pos. 5) are integrated in the basic machine concept. The machine also has an automatic cup infeed (pos. 6) and a cup outfeed (pos. 7). The required tooling for one cup size is listed in pos. 8. The main characteristics of the BDM-681 printing technology are the high reliability, the outstanding print quality, the short change-over time as well as the excellent accessibility and ergonomics (operation from one side only).

The BDM 681 consists of the following:

2 Inking/Printing Unit Model DW-C91-160

2.1 Printing Unit with:

- dedicated servo-drive for the printing unit
- chrome-plated offset cylinder with 6 printing sections, for placing the rubber blankets with adhesive tape
- electronic switch from 6 blanket to 3 blanket mode
- No cup - no printing, pneumatically loaded for consistent pressure
- electronically controlled cup hold-on device
- X, Y & angle adjustments with digital indicators (positioning indicator on display with stored data)

6 **printing plate cylinders** (Nickel Plated) seach equipped with:

- spring loaded pin bars, for fast plate change
- plate cylinder gears that may be disengaged (3 positions)
- radial and axial register adjustments while the machine is running, with gauge indicators
- slide out printing plate cylinders at position 1, 7 and 8 for easy access **(N° 1 & 8 refer 10.1 / 10.2)**

2.2 6 Inking Units (N° 1 & 8 optional)

Each unit opens horizontally a full 90 degrees for easy access to rollers & plate cylinder and is equipped with:

- 2 applicator rollers (one driven) for inking units N° 1-7
- 1 applicator roller, driven, for inking unit N° 8
- 2 oscillating rollers on needle bearings, with cooling connection
- 2 rubber rollers (intermediate) with pressure adjustment
- 1 dab roller (transfer), with dab time adjustment over the display
- 1 ductor roller (hardened), with cooling connection
- 1 leak proofed ink fountain (fast-fit, 160 mm wide)
- 1 ink stirrer to ink fountain
- Switch on/off for applicator rollers and automatic "no cup, no printing" feature

2.3 Automatic Central Lubrication for all inking units

Lubrication cycles are adjustable on the control panel.

2.4 Semiautomatic Washing System

1 pneumatic motor driving each inking unit individually
1 wash tray inserted in the inking units

System may be used both for washing and inking up.

2.5 Cooling Liquid Supply and Distribution to Inking Units

This system includes **all** manifolds, piping and rotary couplings to connect **all oscillating and ductor rollers** to an optional cooling system or heat exchanger.

3 Base, Index and Transfer Unit

3.1 Strong and Robust Base Frame

3.2 Turret head drive & indexing with Torque Motor

- heavy duty torque motor
- 8 stations indexing
- index hub with 8 quick change mandrel positions
- water cooling connection for torque motor

3.3 Servo-Drive Screw Loader

- located at 1:30 position with double cup detection
- fitted with 4 feeder screws (rotating anticlockwise)
- swivels out for total accessibility

3.4 Mandrel Drive for Pre-treatment Station

- located at 12 o'clock position
- automatic adjustment for drive wheel to accommodate wear, permitting correct drive wheel pressure

3.5 Dedicated Mandrel Servo-drive for Print Station

- located at 9 o'clock position
- automatic adjustment for drive wheel to accommodate wear, permitting correct drive wheel pressure
- synchronized, adjustable mandrel and blanket speeds

3.6 Mandrel Drive for UV Station

- located at 6 o'clock position
- automatic adjustment for drive wheel to accommodate wear, permitting correct drive wheel pressure

3.7 Quality Control/Reject Station

- located at the 4:30 position
- push button for selected blow-off of a single cup for print quality control
- automatic blow-off of faulty cups

3.8 Belt Take-off Unit

- located at 3 o'clock position
- driven by frequency controlled AC drive
- adjustable speed over the display
- scales for easy and fast set up

3.9 Electrical Control Cabinet

- Siemens **PLC**
- electrical cabinet (integrated in safety cabin)
- installation according to IEC 204-1, B, C, E **(EN 60204)**
- one electrical connection to the plant's power supply with mains disconnection
- air conditioning for electrical cabinet

3.10 Operator Control Panel (OCP)

- **Siemens touch screen** colour graphic display panel (mounted on movable arm)
- security levels for operator/set-up/supervisory controls
- storage for set-up recipes
- visual advice menu for maintenance work
- reject function for standard mandrels & blankets
- reject analysis visualization for production statistic purposes
- production data check & monitoring

⇨Display and machine letters in **Czech language (additional translation could be made by Greiner and provide as word file).**

3.11 Pneumatic Control Panel

- all pneumatic components on one panel at convenient height for servicing
- only one air connection for the whole system

3.12 Safety Devices in Accordance with EC Standards

- cabinet with safety interlocks for the security of the operating personnel
- large doors on all sides for easy access (open roof)
- noise insulation inside the cabinet
- window to look inside the cabin during set up and production (high speed), without compromising operator's safety

3.13 Technical Documentation: *EC compliant, language in English / German*

- **„BA"** Operating manual (incl. maintenance)	1xhardcopy + download link
- **„ETK"** Spare part catalogue (E,D)	1xhardcopy + download link
- **„ZUB"** Peripheral documentation	download link
- **„AST"** Electrical diagram (E,D,F)	hardcopy inside el. cabinet + download link

⇨ the short manual could be provided in German or English language (Czech language possible if the additional translation could be made by Greiner and provided as **word file).**

4 Corona Pre treatment at 12 o'clock position **(3 kW)**

- Corona pre-treatment unit with progressive intensity
- mandrel rotation monitoring
- generator with built-in hole and porosity detector
- exhaust system to remove ozone
- automatic blow-off of faulty cups
- **electrode holder with quick adjustment system (cup diameter, height, and angle)**

5 UV Curing System at 6 o'clock position

- UVITERNO System EVO, 9kW, 600 W/cm, 1525 W/inch
- phaser-controlled UV unit with display (pulsing function can be switched off)
- sliding lamp unit - during short machine stops, lamp will go to half power and lamp unit will retract from the mandrel area
- various UV safety and control functions
- radiation head with air cooling system
- **UV lamp holder with central adjustment**
- mandrel rotation monitoring
- exhaust system for extraction of hot air and ozone from UV lamp area

6 Automatic Cup Infeed (Version: Right Standard)

6.1 Infeed Elevator, with Upper Electric Pusher, Consisting of:

- stainless steel cradles: **max. 2'100 mm** wide
- continuous feed of cup stacks with help of a servomotor
- controlled pressure to cup stacks, i.e constant pressure to feeding screws
- conveyor belt with adjustable speed
- stainless steel infeed channel from conveyor to screw loader
- standard cradles for a maximum cup diameter of **100 mm**

7 Automatic Cup Outfeed (Version : Right Standard)

7.1 Cup Take-off

- horizontal, AC-controlled take-off system with belts
- AC-controlled conveyor belt between cup take-off and counting unit

7.2 Counting Unit

- laser optical detection for counting cups where cup rim and shape allow
- pneumatic stack separator with **central adjustment**

7.3 Outfeed Table

- multiple stack outfeed table with adjustable angle
- max. possible stack length up to 800 mm

8 One Set of Tooling (size parts) for one cup size

Refer to position A7 (Not Included and deducted from price)
(electrically controlled cup hold on device installed at delivery)
(Titanium shafts for the mandrels should be installed for
speeds around to 700 cups (730) / minute (BDM 681) Not Included

9 Standard Peripherals

9.1 Feed Table for Infeed Elevator (max. width 2'100 mm)

Cup stack table in front of elevator (increased storage)

9.2 Printing Plate Punching Unit

Please refer to Position A6 (not included and deducted from the price) Not Included

Sub-total

for one 6-8 colour cup printing system, Model
BDM-681 UVD, equipped with 8-colour heads
as specified in pos. 1 - 9, incl. 1 set of size parts
including. Installation, start-up on site & training
including packing & freight **FCA**
excluding insurance costs, taxes, duty unpaid CHF 810'000.—

10 Options Requested by Greiner

10.1 7th Inking Unit No. 1 incl. Ink Stirrer

(slide out printing plate cylinders to allow easier access) CHF 38'000.—

10.2 8th Inking Unit No. 8 incl. Ink Stirrer

(slide out printing plate cylinders to allow easier access) CHF 38'000.—

Balance *CHF* *886'000.—*

Balance	*CHF*	*886'000.—*
10.3 Water Cooler (Tool Temp) , water/water with heat exchanger, for the cool water supply with intergrated heating capability (water connection for water/water heat exchanger required); incl. integration	CHF	8'000.—
10.4 Internet Connection eWon	CHF	1'200.—
10.5 Interface for Packaging Machine Consisting of:		
1) Dual stack pusher	CHF	6'000.—
2) Electrical hardware and software for a Pack Matic connection	CHF	3'000.—
Sub-total, including position 10	CHF	904'200.—
Minus discount of 15%	**CHF**	**- 135'630.—**
Price for one 8 colour cup printing system, Model **BDM-681 UVD,** equipped with 8 inking units as specified in pos. 1 - 10 **including**. Installation, start-up on site & training **including** packing & freight **FCA** **excluding** insurance costs, taxes, duty unpaid	**CHF**	**768'570.—**

Additional Options (Greiner Standard)

A1) Automatic Roller Washing Unit, Consisting of: 1) **Solvent container and distribution system** installed on the side of the machine. 2) **Automatic inking unit washing between production intervals, for quick and efficient washing.** **Additional charge** (CHF 25'000.-- minus 15%)	CHF	21'250.—
A2) Lever Inking Unit System & Inking up Program For a steady ink volume, easy to reproduce, unsegmented ink blades, 8 levers with scale and 0 adjustment **Additional charge** (in replacement of 8 standard inking units) (4'200.—per unit, minus 15%)	CHF	28'560.—
Combined inking up program **Additional charge** (CHF 3'000.-- minus 15%)	CHF	2'550.—
A3) Stronger Fan (4.3 instead of 1.5 kW) **Additional charge** (Net)	CHF	2'000.—
A4) Special Plastic Guides (stacking table) **Additional charge** (Net)	CHF	1'000.—
Balance	*CHF*	*823'930.—*

Balance		*CHF*	*823'930.—*
A5)	**New Elevator with Upper Pusher** - continuous feed of cup stacks with help of a servomotor - controlled pressure to cup stacks, i.e constant pressure to feeding screws **Additional charge** (CHF 6'000.-- minus 15%)	CHF	5'100.—
A6)	**Printing Plate Punching Device (pos. 9.2)** adjustable to length Could be used from first machine Com. 10614 / year 2003 has been delivered to Pittston. **Less Price** (CHF 9'600.— minus 15%)	- CHF	8'160.—
A7)	**1 Complete Set of Size Parts (Pos. 8)** (Mandrels & Scrolls) **Less Price** (CHF 12'000— minus 15%)	- CHF	10'200.—
A8)	**Greiner Specials (acc. sep. word document)** (Add. Plug & Air Connector on Stacking Table etc.)		Included
A9)	**Wear Parts** (Standard set; spec. Polytype) incl. Tool Box		Included
A10)	**Reject (waste) Reduction Programme** (2 variants) A) A couple of cups are printed, then 6 cups are ejected. B)8 cups are printed on several times then ejected, then a further 8 cups are printed on several time and ejected.		Included
A11)	**Automatic Central Lubrication** for all inking units (please refer to Pos. 2.3)		Included
A12)	**New hinged protection at cup counting device (Pos. 7.2)** The protection made of Plexiglas is at the cup counting device and could be hinged (incl. security circuit and integration)		Included
A13)	**New Improvements "Best Practice"** - **End plate** at stacking table (with open gap for better cleaning) - **No open profile** at side guidance (cleaning) - **Brackets** at the feeding bars with 2 holes - **Isolation** at main cabinet must be resistant against UV and able to be cleaned with vacuum cleaner - **Cup infeed** with two rollers		Included
Price for a complete BDM 681 Machine, Since 2007 (Com. 10929 / 10930) this price is unchanged		**CHF**	**810'670.—**
Currency exchange rate CHF / Euro (0.94 / 29. 2025)		**Euro**	**862'415.—**
Minus Special reduction: Compensation discount (~33 %) (Same Compensation discount (~33 %) as for last machine to Greiner Litvinov / CZ Com. 11640 / year 2020 and to Com. 11776 / 2022 & Greiner Odzaci/Serbia Com. 11787 / 2022 as well as to Greiner Tuzla/TR Com. 11826/2024		**- Euro**	**284'597.—**

Total Price **Euro 577'818.—**

PLUS Price increase of 10 % (since 2020)
because of higher cost of sub suppliers
price increase of parts (Siemens, Festo,
CMC, etc., higher cost for supply chain **+ Euro 57'882.—**

Total New NET Price **Euro 635'600.—**

Discount to get same price as for Com. BB-11776
dated Sept 15. 2022 **(No discount because one machine only)** **No Discount**

Elevator and stacking table LEFT hand Version (Pos. 6 & 7)
Price Greiner Agreement (Standard cost Euro 5'700.— / refer
to 12.3 Layout 1579762 A) (Could be chosen if required) **Included**

Plus Blanket cylinder cover as a protection of the rubber
Blankets and gears from contamination during production such as
dust, ink mist or UV light.

Open position Closed position

The cover is closing and opening automatically as the
machine enclosure door is being opened or closed
Price (NET); Greiner requirement dated Sept. 15. 2022 **Euro 2'500.—**

Plus Preparation of LED curing for being able to do the installation of
the LED lamp at later date (mechanical and electrical preparation
incl. modification of software and operation over the display).
(LED lamp type Phoseon not included) **Euro 4'000.—**

Total Price (same scope of supply as previous machine
delivered to Greiner Tuzla Com. 11826 / year 2024) **Euro 642'100.—**

~~**Plus Price increase** since 2023 **of 1 %** Euro 6'420.—~~

Total FINAL NET Price **Euro 642'000.—**

11 Special Conditions:

11.1) BDM 681 Machine Speed (not applicable for a BDM 682)

This machine is driven by a Torque Motor. It is guaranteed to operate at a speed of 650 cups / minute. Machines of type 681 delivered to Greiner have recently had this production speed limit removed enabling them to operate at 730 cups/minute. Machines of type 682 cannot operate at speeds higher than 700 cup/minute, due to the wide diameter of the cup. The machine may only operate at that speed when fitted with titanium mandrels.

11.2) Guaranteed Processes

At speeds above 650 cups / minute (in machines capable of operating at 700 cups / minute and above), we cannot guarantee the efficiency of processes such as pre-treatment and UV drying, as the providers for both the pre-treatment system (Cubotron) and the UV drying (Uviterno) do not guarantee correct operation at such speeds.

Please note at these speeds there is a considerable risk of inner wear occurring as well as ink mist forming. We recommend installing an extractor fan.

11.3) Information about Elevator

The elevator (Pos. 6) and the stacking table (Pos. 7) are quoted as Standard RIGHT Version. If the Version LEFT (elevator and stacking table on left side / refer to Layout 1578762 A) will be asked we would need to know this about 3 month's before the FAT date.
Specially for Greiner the LEFT Version would not cause additional cost (Normally plus Euro 5'700.--).

11.4) LED Curing

Should the customer choose Phoseon LED UV curing, the scope of supply is to be discussed to ensure we meet the customer's expectations. The following note is be noted on the description of the LED UV curing:
Enclosure glass tinting for UV protection with increased visibility (we only apply a single layer of UV film instead of two layers, which is needed for mercury vapour UV)
"There exists a critical relationship between the ink formulation and the functionality of cure to achieve top performance of adhesion and speed".

11.5) Printing Plate Punch

The printing plate punch could be used from first machine BDM 611/916 delivered in 2003 / Com. 10614

11.6) Information about Tax

It could happen that the additional tax of 1.7 % could be asked while importing the machine because the part of preferential discounted parts (delivered from Switzerland or the rest of Europe) is below 60 %.
The reason for this is the Swiss currency which is getting stronger against the Euro. Also a few of our sub suppliers are not able to send us the confirmation of the preferential discounted parts because their production is not in Europe anymore.
Finally we as Polytype also get some partly assembled parts such as Elevators, etc. from our modern assembling plant in Thailand which is out of Europe.
If such tax will be taken because it might be that we are not able to send the preferential discounted confirmation and we will inform you in advance and later reimburse the amount.

Equipment, Materials & Services not Included in the Scope of Delivery:

- Foundation and masonry where necessary
- Electrical main connection / compressed air main connection
- Water connection (with chiller "air/water" no connection needed)
- Exhaust air ducting and stacks from machine to outside of building
- Insulation where necessary
- Transport to the place of installation and insurances
- Accommodation for the Polytype technician during machine installation (Greiner pays for a hotel)
- Assistance during the commissioning and supply of tools
- Duty and taxes

12 BDM 681 Machine Specifications

Printing plate cylinder diameter		165	mm
Max. print height (depending on UV lamp length)		145	mm
Max. print length with standard plate cylinder		269 / 418	mm
Number of blankets (electronically switchable)		6 / 3	sections
(6 / 3 blanket mode depends on cup size and production speed)			
Max. rim dia. of cup (depending on elevator cradles)		100	mm
Min. rim dia. of cup		60	mm
Max. stack length: Infeed up to 2'100 mm / outfeed up to 800 mm			
Max. cup height		200	mm
Min. cup height		35	mm
Min./Max. taper		2 - 15	Grad
Printing blanket thickness	(+/- 0,02 mm)	2 x 1,9	mm
Double sided adhesive tape	(+/- 0,02 mm)	2 x 0,3	mm
Printing plate thickness		0,73	mm
(Printing plate drawing 1390824 B)			

Max. production speed (depending on cup size, shape, stack height, stack length, materials, quality and print design) up to	**39'000 cups / hour (Torque Motor) *** **(NEW up to 43'800 cups / hour) ****
Standard paint of machine and covers	**RAL 9016 Traffic-white**
El. load IEC 204-1, Annex B,C,E **(EN 60204)** approx.	38 kVA
Electrical power (-10% +6%) (L1, L2, L3, PE)	3 x 400 V, 50 Hz
Compressed air min. / consumption max.	6 bar, 120 Nm3/h, ¾"G
Air treatment unit	20 micron abs. / oil-free
Permissible humidity	33% rel. at 20°C
Water connection: (with chiller air/water no needed)	
Water temperature (for cooling of the ink unit)	25°C + / - 3°C / 3 - 5 bar
Quantity of heat to be dissipated	max. 9 kW
Exhaust (dia. of pipe 160 mm) height approx. 2'700 mm	3'600 m3/h 30°C
Weight of the basic machine (approx.)	ca. 7'000 kg
Room temperature & max. humidity	35 °C / 80 % rel.

Noise level (emission) at the machine: the minimum value of **85 dB(A)** cannot be guaranteed on this machine, which is why we recommend wearing ear protection.

Alterations of the technical data are possible for unknown shapes, materials and surface conditions as well as new developments. The right to change specifications and designs at any time without notice is reserved.

* guarantee for speed / ** machine must be fitted with titanium basic shafts.

13 Commercial Conditions

Price	In EURO, (€) ex factory Polytype / Switzerland incl. packing, **FCA, Fribourg**	
Packing and Loading	**FCA, Fribourg** included (Incoterms 2020)	
Freight & Insurance	**Not included** (organised by Greiner)	
Payment	**10 %**	(Euro 64'200.--) At the time of order (against Bank Guarantee valid till December 19. 2025.)
(Proposal)	**80 %**	(Euro 513'600.--) On successful checkout at Polytype's, factory, before delivery
	10 %	(Euro 64'200.--) After machine installation, but no later than 60 days after invoicing.
Bank Account	UBS Account No. : 260-633.153.61V BIC UBSWCHZH 80A IBAN : CH85 0026 0260 6331 5361 V	
Printing material (during machine acceptance)	For this machine no set of size parts are included. Greiner would have to send us the complete set of size parts (printing cones with Titanium shafts, infeed scrolls and hold-on disc) plus about 10'000 sample cups, printing plates, rubber blanket and UV ink. All material should be sent to Polytype approx. 4 – 6 weeks before the machine acceptance. The exact date will be defined at the time of order.	
Machine Acceptance (at Polytype)	Approx. 2 weeks before final delivery.	
Delivery (from Polytype)	Approx. 4 month's from receipt of firm order and down payment to checkout at POLYTYPE's factory in Fribourg/Switzerland. To be confirmed when order is placed, **Subject to prior sale.**	
Delivery Address	Greiner Packaging s,r.o. CZ – 435 33 Louka u Litvinova Czech Republic	

Installation & Training	Included. For the machine installation and training, a technician will be available for a maximum duration of 5 work days. Hotel accommodation and collection (if required) is to be organized and paid for by Greiner.
Guarantee	**24 months** (starts 30 days after delivery to the latest) (wearing parts not included)
Conditions of Supply	Both parties exclude the general terms and conditions of business to each other. Any dispute arising out or in connection with this contract which cannot be settled amicably shall be resolved by the court and laws of Switzerland.

Polytype AG
CH-1701 Fribourg
Switzerland

Daniel Naef André Bielmann

Enclosures:- Layout drawing No. 1514220 D (Standard RIGHT Version)
- Printing plate drawing No. 1390824 B

POLYTYPE Becherdruckmaschine

POLYTYPE Cup printing machine

BDM-681

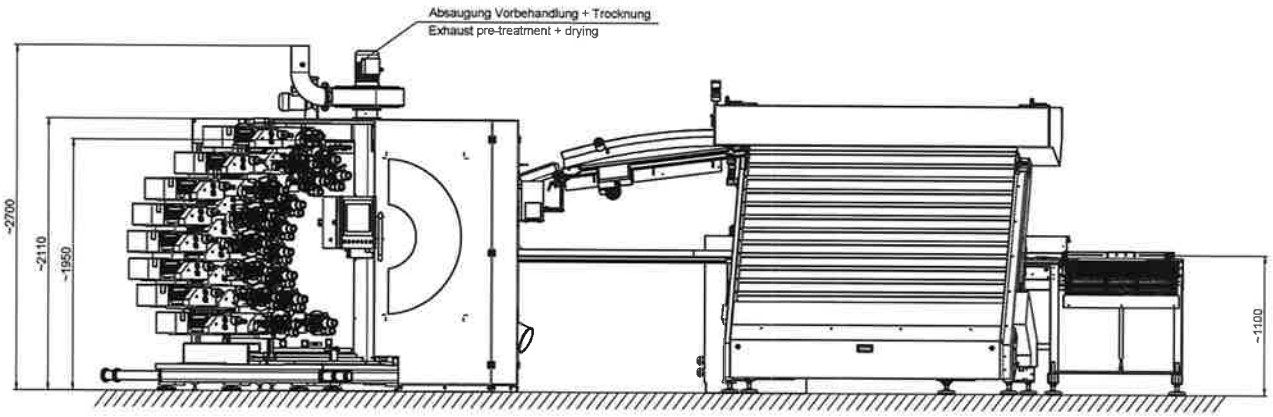

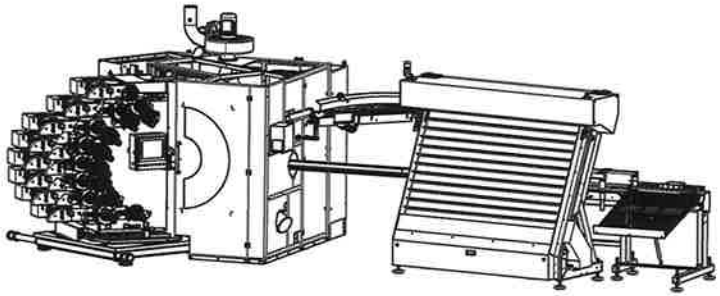

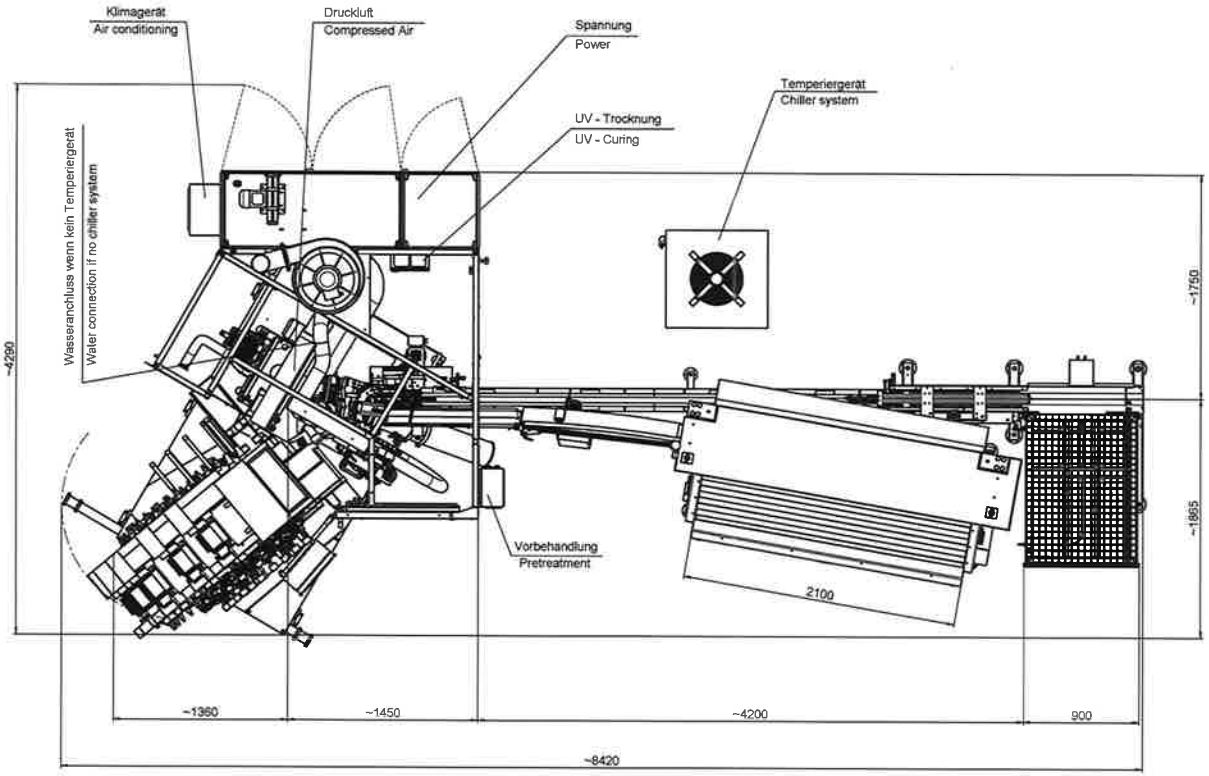

Technische Daten		Technical data
Min. Becherhöhe	35 mm	Min. cup height
Max. Becherhöhe	200 mm	Max. cup height
Min. Randdurchmesser	60 mm	Min. edge diameter
Max. Randdurchmesser	185 mm	Max. edge diameter
Winkel	2-15°	Angle
Max. Druckhöhe	135 mm	Max. print height
Max. Stapellänge für Elevator	2100 mm	Max. pile lenght for elevator
Max. Stapellänge für Rolltisch	800 mm	Max. pile lenght for table
Max. Druckbildlänge 6 Sektionen	289 mm	Max. print lenght image 6 section
Max. Druckbildlänge 3 Sektionen	418 mm	Max. print lenght image 3 section
Klischeezylinderdurchmesser	165 mm	Printing plate cylinder diameter
Max. mögliche Druckbildbreite	160 mm	Max. possible print width image
Klischeelochabstand	472 mm	Hole printing plate interval

Kanten ohne Maßangaben 0,5 angefähr oder gerundet	Ohne Allgemeintol. DIN ISO 2768-mK DIN ISO 13920-BF DIN 8570				A1	Schutzvermerk DIN 34	Werkstoff %		Gezeichnet: RAN		Datum: 16.11.2017		
Allgemeine Toleranzen für Längenmaße	bis 6	über 6 - 30	über 30 - 120	über 120 - 400	über 400 - 1000	über 1000 - 2000	Maßstab	1:20	Fine1: RMS		Fine2:		
Spanende Bearbeitung	±0.3	±0.4	±0.6	±0.8	±1.2	±2.0	Dok.-Art:	PZI	Bagehäll-Änd.				
Stäge auf Länge	±0.5	±0.5	±0.6	±0.8	±1.2	±2.0	Teil-Dok.:	000	Bezugszchng.	1478075			
Gleich und Schweißkonstruktionen	±1.0	±1.0	±2.0	±2.0	±3.0	±4.0	Dok.-Version:	03	Basiszchng.				
									Prod.-Hierarchie	210			
polytype	Layout Becherdruckmaschine BDM-681 Layout cup printing machine BDM-681								Zeichnungsnummer 1514220			Rev. D	

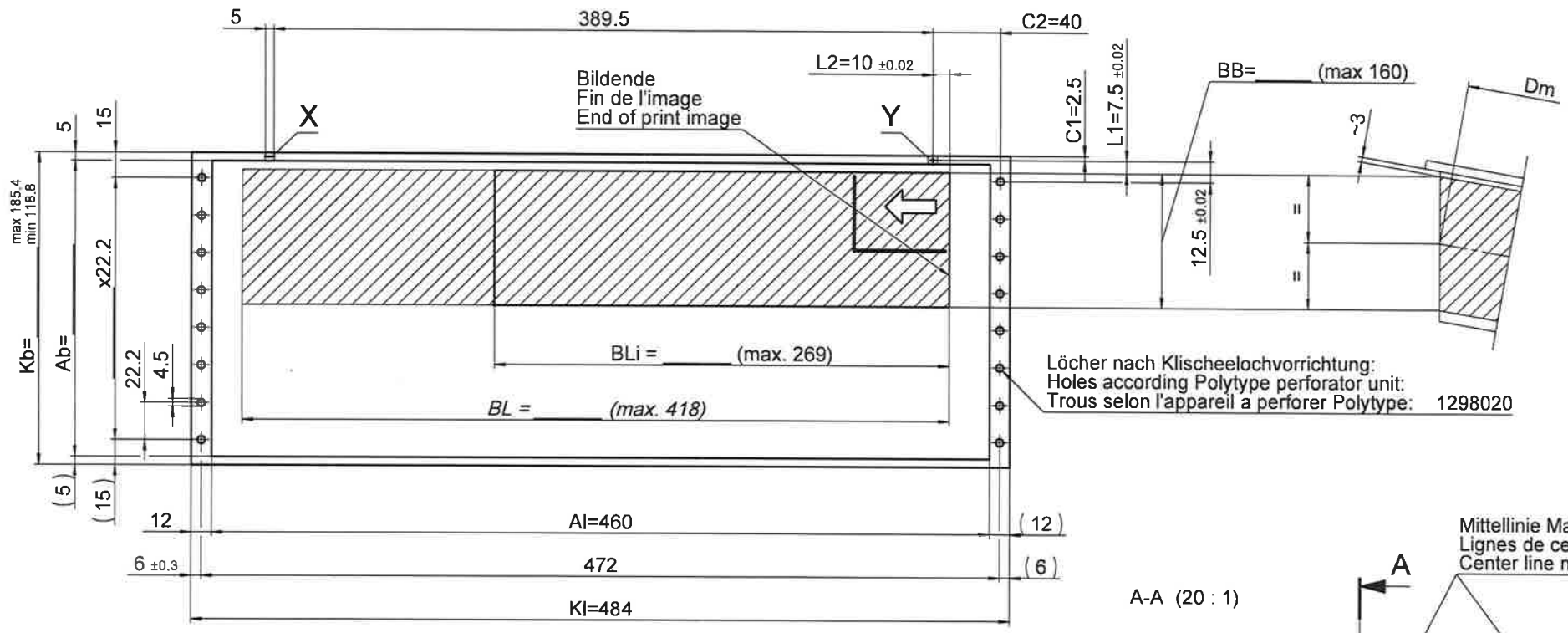

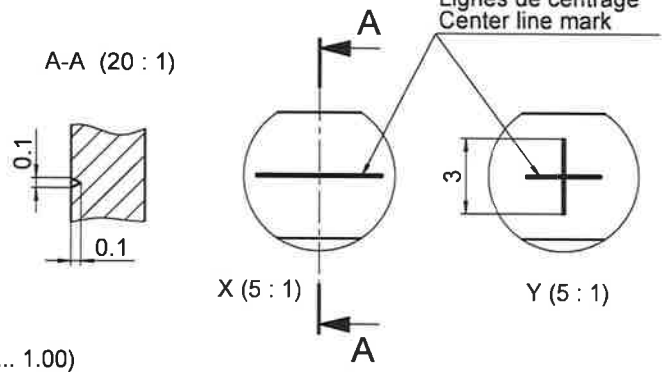

Maschinenverbindung / machine connection / liaison machine	
Klischeezylinderdurchmesser / Printing cylinder diameter / diamètre du cylindre d'impression [mm]	D = 165
Druckbreite / print width / largeur d'impression [mm]	B = 160
Indexierung / indexing / indexage [°]	I = 170

Die mit einem Klischeesatz mögliche Druckgenauigkeit hängt ab vom genauen masshaltigen Anordnen der beiden Registermarkierungen auf dem Original. (X+Y)

La qualite d'impression d'un jeu de cliches depend de l'exactitude de la mesure des deux reperes sur l'original. (X+Y)

The achieveable printing quality w ith a set of printing plates depends on the exact and true to measure spacing of both register marks on the original. (Y+X)

Markierungen (X+Y) für Einstelloptik anbringen

Les reperes (X+Y) doivent être graves pour permettre le réglage de precision optique

Register marks (X+Y) for optical register setting

Kürzel / Key / Légende

Kb	Klischeebreite	Width of printing plate	Largeur cliché
Ab	Aetzspiegelbreite	Width of plate etching	Largeur gravée
Kl	Klischeelänge	Length of printing plate	Longeur cliché
Al	Aetzspiegellänge	Length of plate etching	Longeur gravée
BB	Bildbreite	Printing image heigt	Largeur d'impression
BL	Bildlänge mit 2 oder 3 Sektoren	Printing image length w ith 2 or 3 sectors	Longeur de l'image gravée avec 2 ou 3 secteurs
BLi	Bildlänge mit 6 Sektoren	Printing image length w ith 6 sectors	Longeur de l'image gravée avec 6 secteurs
Dm	mittlerer Durchmesser	Diameter at center line	Diametre sür mediane
C1	Seitenkreuzposition	Cross position lateral	Position de la croix latéral
C2	Umfangkreuzposition	Cross position circumferential	Position de la croix circonférenciel
L1	Seitenbildposition	Image position lateral	Position de l'image latéral
L2	Umfangbildposition	Image position circumferential	Position de l'image circonférenciel

BL, BLi = Dm x 3.142 x (0.97 ... 1.00)

KENNWORT:

KOMMISSION:

BECHERTYP:

Klischeedicke: 0.73 mm
Epaisseur du cliche: 0.029"
Stereoplatte thickness:

Kanten ohne Massangaben 0.6 angeschrägt oder gerundet	Übrige Allgemein-Tol. DIN ISO 2768-mK EN ISO 13920-BF DIN 6935		A3		Schutzvermerk DIN 34		Werkstoff: NYLOPRINT		Gezeichnet: COR	Datum: 11.11.2014
									Frei1: COR	Frei2: COR
Allgemein-Toleranzen für Längenmasse	bis 6	über 6 - 30	über 30 - 120	über 120 - 400	über 400 - 1000	über 1000 - 2000	Massstab:	1:2.5	Bagatell-Änd.	.
Spanende Bearbeitung	±0.3	±0.4	±0.6	±0.8	±1.2	±2.0	Dok.-Art:	PZI	Bezugszchng.	10000124
Sagen auf Länge	±0.5	±0.5	±0.6	±0.8	±1.2	±2.0	Teil-Dok.:	000	Basiszchng.	
Blech- und Schweisskonstruktionen	±1.0	±1.0	±2.0	±2.0	±3.0	±4.0	Dok.-Version:	01	Prod.-Hierarchie	22000

polytype

KZ-Zeichnung C D165 B160 L472 BL418 I170
PC-Drawing C D165 B160 L472 BL418 I170

Zeichnungsnummer: 1390824

Rev.: B